CCG CABLE TERMINATIONS

Posi Fit™

JUNCTION BOX - Ex eb I, Ex eb IIC, Ex ec IIC, Ex tb IIC

for Hazardous Area Installations



Features and Benefits

- Posi Fit™ box for use in Group I mining (low impact areas), Group II and Group III applications.
- High-temperature resistance, corrosion-resistant and anti-static properties.
- Raised domed lid facilitates connections to be made clear of the box base.
- Screw-on lid provides ease of installation. Lid locking with a special key prevents unauthorized tampering.
- Boxes with see-through polycarbonate “adapt-a-lids” available on request.
- Supplied complete with safety securing lid lanyard.
- Only approved CCG cable glands and Ex e terminals must be used. DIN Rail mounting studs are provided for use with terminal blocks.
- Dust and watertight to IP66/68, when fitted with CCG sealed cable glands.
- No drilling of the cable entries is required. Internal earthing to all entries and rail.

Technical Data

Type:	Posi Fit™ 4-Way Junction Box Posi Fit™ Y Junction Box Posi Fit™ H Junction Box
Box Material:	Impact corrosion and UV resistant glass reinforced polyester compound Polycarbonate (see-through adapt-a-lids), O ring seals: Silicone or Sarlink seals. Terminals: Wellamid or Wemid
Optional Accessories:	Ex Certified Terminals, Box Spanner (Lid Locking Key). Blanking plugs are provided
Note:	The installer should check that the materials are suitable for the installation environment

Standards and Certifications

Equipment Protection Levels:	SANS: (Finished)Ex e IIC T6 Gb / Ex nA IIC T6 Gc / Ex tb IIIC T70°C Db		
	SANS: (Unfinished) Ex e IIC Gb / Ex nA IIC Gc / Ex tb IIIC Db		
	IECEx/INMETRO: (Finished) Ex eb I Mb / Ex eb IIC T6 Gb / Ex ec IIC T6 Gc / Ex tb IIIC T70°C Db / Ex tc IIIC T70°C Dc		
	IECEx/INMETRO: (Unfinished) Ex eb I Mb / Ex eb IIC Gb / Ex ec IIC Gc / Ex tb IIIC Db / Ex tc IIIC Dc		
	ATEX/UKEX: (Finished) Ⓔx I M2, Ⓔx II 2GD / 3G Ex eb I Mb / Ex eb IIC T6 Gb / Ex ec IIC T6 Gc / Ex tb IIIC T70°C Db / Ex tc IIIC T70°C Dc		
	ATEX/UKEX: (Unfinished) Ⓔx I M2, Ⓔx II 2GD / 3G Ex eb I Mb /Ex eb IIC Gb / Ex ec IIC Gc / Ex tb IIIC Db / Ex tc IIIC Dc		
	CCC: (Finished) Ex eb IIC T6 Gb, Ex tb IIIC T70°C Db, Ex tc IIIC T70°C Dc		
	CCC: (Unfinished) Ex eb IIC Gb, Ex tb IIIC Db, Ex tc IIIC Dc		
Ambient Temperature:	-60°C to +55°C (Finished)		
Service Temperature:	-60°C to +110°C (Unfinished)		
Conformance:	Standard:	Certificate:	
IECEx	IEC 60079 Part 0, 7, 31, IEC 60529	IECEx CML 15.0072X	(Finished)
	IEC 60079 Part 0, 7, 31, IEC 60529	IECEx CML 15.0071U	(Unfinished)
	IEC 60079 Part 0, 7, 31, IEC 60529	IECEx TSA 25.0012X	(Finished)
	IEC 60079 Part 0, 7, 31, IEC 60529	IECEx TSA 25.0011U	(Unfinished)
ATEX	EN 60079 Part 0, 7, 31	CML 14ATEX3036X	(Finished)
	EN 60079 Part 0, 7, 31	CML 14ATEX4038X	(Finished)
	EN 60079 Part 0, 7, 31	CML 14ATEX3037U	(Unfinished)
	EN 60079 Part 0, 7, 31	CML 14ATEX4039U	(Unfinished)
UKEX	EN/BS 60079 Part 0, 7, 31	CML 21UKEX3008X	(Finished)
	EN/BS 60079 Part 0, 7, 31	CML 21UKEX4010X	(Finished)
	EN/BS 60079 Part 0, 7, 31	CML 21UKEX3007U	(Unfinished)
	EN/BS 60079 Part 0, 7, 31	CML 21UKEX4009U	(Unfinished)
INMETRO (Brazil)	ABNT NBR IEC 60079 Part 0, 7, 31, IEC 60529	TÜV 15.0481X	(Finished)
	ABNT NBR IEC 60079 Part 0, 7, 31, IEC 60529	TÜV 15.0482U	(Unfinished)
CCC/CNEx (Chinese)	GB/T3836.1, 3, 31-2021	CNEx 21.3507X	(Finished)
	GB/T3836.1, 3, 31-2021	CCC 2021312303000506	(Finished)
	GB/T3836.1, 3, 31-2021	CNEx 21.3390X	(Unfinished)
	GB/T3836.1, 3, 31-2021	CCC 2021312313000393	(Unfinished)
SANS	SANS/IEC 60079 Part 0, 7, 31	MASC S/21-9001X	(Finished)
	SANS/IEC 60529	MASC S/21-9002U	(Unfinished)
IP66/68 2m Protection	IEC 60529	IECEx CML 15.0071U	
ABS	IEC 60529	25-0167226-PDA	
DNV	IEC 60529	TAE0000011	
ClassNK	IEC 60079 Part 0, 7, 31	TA25240M	
Deluge Protection	DTS-01	CML 14CA370-1	
Short Circuit/ Cont.Current	IEC 60947-7-2, IEC 62444	CATAPULT OR/15/11677_2	

Conditions for Safe Use - X

- In Group I applications, the junction box must only be used in low impact areas and where it is not exposed to oils or greases.
- The CCG lid-locking key must be used to open and close units that do not have locking screws such as “clear cover units”.
- When fitted with the polycarbonate (clear) cover the equipment must be installed to prevent the generation of electrostatic charge.
- When fitted with the clear lid, the unit must be installed to prevent UV exposure to the internal components fitted.
- Only a damp cloth should be used to clean the junction box.
- Suitably certified cable glands and/or plugs shall be used in the enclosure threaded entries.
- Only the terminals listed below may be used, following the specific installation conditions set down by the terminal manufacturer/terminal certification.

Manufacturer	Certificate No.	Ex Coding	Type	Conductor / Terminal Block Size	Maximum Current ≤ 55°C Ambient	Maximum Current ≤ 40°C Ambient
Weidmuller	IEC Ex ULD14.0005U Demko 14ATEX1338U CCC 2020322313001819	Ex eb IIC	WDU 2.5, 4, 6, 10, 16, 35 and 70N WPE 2.5, 4, 6, 10, 16, 35 and 70N	2,5 mm² 4 mm² 6 mm² 10 mm² 16 mm² 35 mm² 70 mm²	8,34 A 11,12 A 14,25 A 19,81 A 26,42 A 43,46 A 66,75 A	11,90 A 15,86 A 20,33 A 28,26 A 37,68 A 61,98 A 95,21 A
Weidmuller	IECEx TUR18.0024U TÜV 18 ATEX 8221U CCC 2020322313002230	Ex eb IIC	AKZ4 and AKE4	4mm²	11,12 A	15,86 A

2026 © CCG CABLE TERMINATIONS (PTY) LTD

CCG CABLE TERMINATIONS

4-Way / TX-Box

for hazardous installations

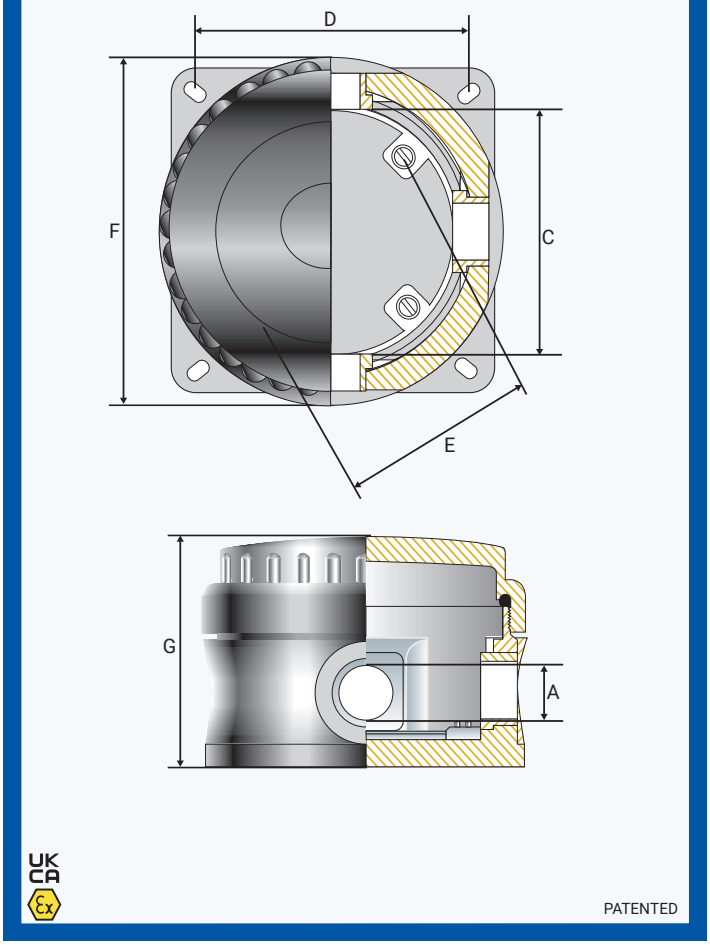

UK CA Ex

PATENTED

Product Code	Box Size Ref.	Entry Thread 'A'	Distance Between Inserts 'C'	Mounting Centres 'D'	Rail Mounting Centres 'E'	Outer Diameter 'F'	Max. Overall Height 'G'
1003-0-M16	0	* M16	71.0	79.0	65.0	100.0	78.0
1003-0	0	M20	71.0	79.0	65.0	100.0	78.0
100301-M16	1	* M16	88.0	92.0	80.0	118.0	98.0
100301	1	M20	88.0	92.0	80.0	118.0	98.0
100302-M16	2	* M16	108.0	107.0	98.0	140.0	114.0
100302-M20	2	* M20	108.0	107.0	98.0	140.0	114.0
100302	2	M25	108.0	107.0	98.0	140.0	114.0
100303-M16	3	* M16	166.0	167.0	150.0	203.0	142.0
100303-M20	3	* M20	166.0	167.0	150.0	203.0	142.0
100303-M25	3	* M25	166.0	167.0	150.0	203.0	142.0
100303	3	M32	166.0	167.0	150.0	203.0	142.0
100304-M16	4	* M16	263.0	240.0	246.0	298.0	186.0
100304-M20	4	* M20	263.0	240.0	246.0	298.0	186.0
100304-M25	4	* M25	263.0	240.0	246.0	298.0	186.0
100304-M32	4	* M32	263.0	240.0	246.0	298.0	186.0
100304-M40	4	M40	263.0	240.0	246.0	298.0	186.0

All dimensions are in mm.
* Different arrangements of entry sizes are available on request as stated above.

Y-Box

for hazardous installations

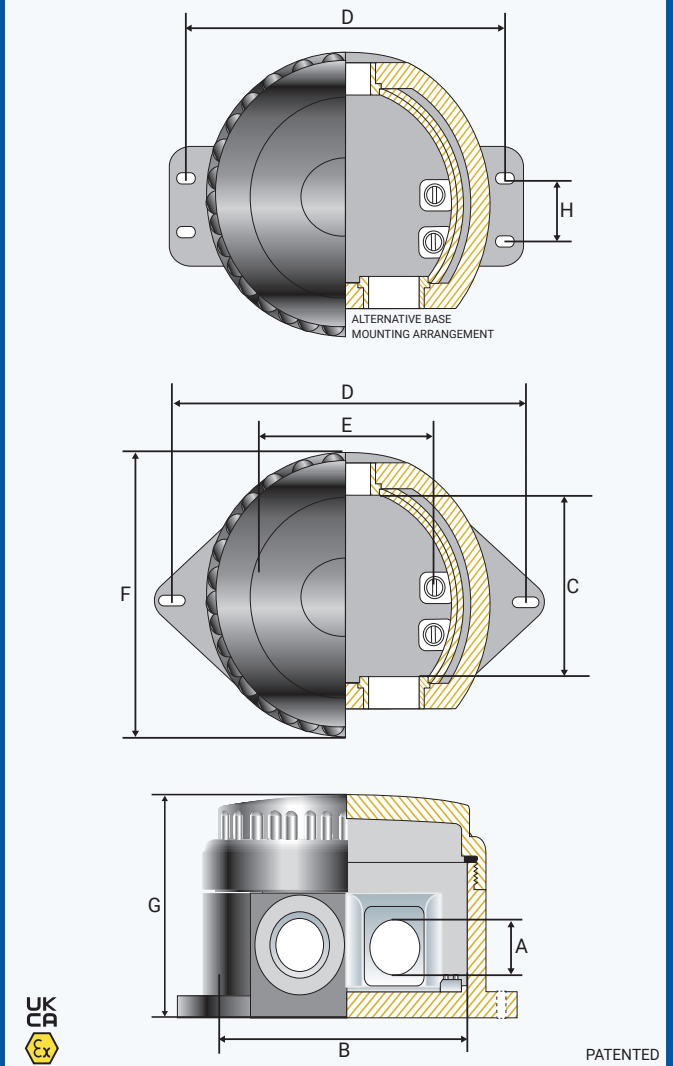

UK CA Ex

PATENTED

Product Code	Box Size Ref.	Entry Thread 'A'	Internal Dia. 'B'	Distance Between Insert 'C'	Mounting Centres 'D'	Rail Mounting Centre 'E'	Outer Dia. 'F'	Max. Overall Height 'G'	Distance Between Mounting Holes 'H'
1009-0-M16	0	*M16	84.0	60.0	108.0	62.0	100.0	84.0	-
1009-0	0	M20	84.0	60.0	108.0	62.0	100.0	84.0	-
100901-M16	1	*M16	101.0	75.0	132.0	77.0	116.0	94.0	-
100901	1	M20	101.0	75.0	132.0	77.0	116.0	94.0	-
100902-M16	2	*M16	123.0	94.0	148.0	95.0	140.0	104.0	42.0
100902-M20	2	*M20	123.0	94.0	148.0	95.0	140.0	104.0	42.0
100902	2	M25	123.0	94.0	148.0	95.0	140.0	104.0	42.0
100903-M16	3	*M16	182.0	150.0	237.0	152.0	205.0	144.0	-
100903-M20	3	*M20	182.0	150.0	237.0	152.0	205.0	144.0	-
100903-M25	3	*M25	182.0	150.0	237.0	152.0	205.0	144.0	-
100903	3	M32	182.0	150.0	237.0	152.0	205.0	144.0	-

All dimensions are in mm.
* Different arrangements of entry sizes are available on request as stated above.

H-Box

for hazardous installations

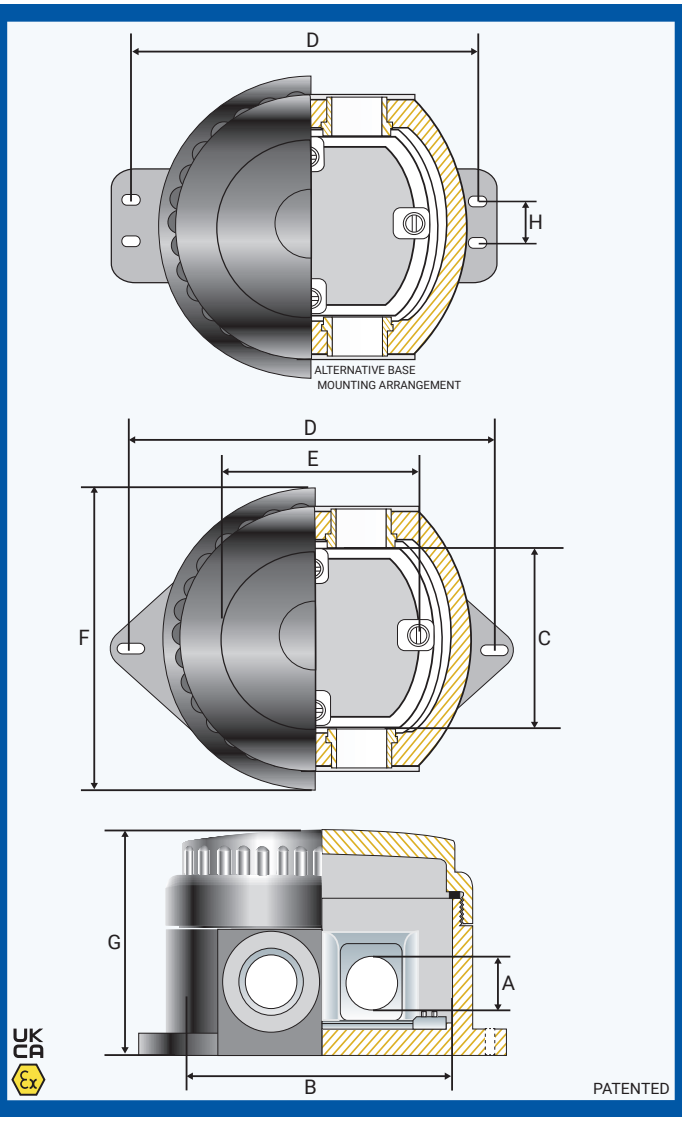

Product Code	Box Size Ref.	Entry Thread 'A'	Internal Dia. 'B'	Distance Between Insert 'C'	Mounting Centres 'D'	Rail Mounting Centre 'E'	Outer Dia. 'F'	Max. Overall Height 'G'	Distance Between Mounting Holes 'H'
100301-H-M16	1	* M16	103.0	69.0	130.0	85.0	116.0	93.0	-
100301-H	1	M20	103.0	69.0	130.0	85.0	116.0	93.0	-
100302-H-M16	2	* M16	124.0	78.0	148.0	104.0	138.0	110.0	42.0
100302-H-M20	2	* M20	124.0	78.0	148.0	104.0	138.0	110.0	42.0
100302-H	2	M25	124.0	78.0	148.0	104.0	138.0	110.0	42.0

All dimensions are in mm.
* Different arrangements of entry sizes are available on request as stated above.

Tools /Accessories

for hazardous installations

Box Spanner (Lid Locking Key)

ADAPTOR LID LOCKING KEY



Product Code	Box Size Reference
4012-0	0
401201	1
401202	2

Box Spanner (Lid Locking Key)

ADAPTOR LID LOCKING KEY



Product Code	Box Size Reference
401203	3

Clear Lid

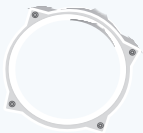

Product Code	Box Size Reference
100301-CL	1
100302-CL	2
100303-CL	3

Pole Mounting Bracket



Product Code	Box Size Reference
401800	0
401801	1
401802	2
401803	3

Non Metallic Plugs IP66/68 complete with washer

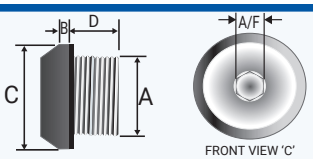

Product Code	Box Size Ref.	Metric Dia 'A'	Dia Max 'B'	Dia Max 'C'	Dia Min 'D'	Hex Size Max A/F	Torque Value Nm
352720	0 / 1	M20x1.5	7.0	28.0	12.0	10.0	7.0
352725	2	M25x1.5	7.0	33.0	15.0	10.0	9.0
352732	3	M32x1.5	7.0	40.0	15.0	10.0	12.0
352740	4	M40x1.5	7.0	48.0	15.0	14.0	20.0

2026 © CCG CABLE TERMINATIONS (PTY) LTD

CCG reserves the right to make alterations to the technical data, dimensions, designs and products available without notice. The illustrations cannot be considered binding. Please contact CCG for assistance.

POSI FIT™ JUNCTION BOX

CCG CABLE TERMINATIONS

Conditions for Safe Use - X

- Terminal blocks shall only be used on the applicable rail and shall allow sufficient space to make connections and to close the cover/lid.
- The creepage and clearance between terminal blocks and from the terminal block to any earthed / bonded metallic part shall comply with the EN60079-7 requirements for the acceptable voltage of the terminal blocks.
- The current in the junction box is limited by the size of the conductor and shall not exceed the voltage as per Table 2.

Installation instructions for Posi Fit™ Box without Ex components

- When fitted with any internal components the assembly must be re-certified and the cover re-marked accordingly.

Wiring and Installation instructions for Posi Fit™ Box with Ex components

- Installation must be carried out by a competent person.
- Do not install under live current conditions.
- The box must not be modified in any way, as this will invalidate the certification.
- All wiring must be carried out in accordance with the relevant Codes of Practice.
- The wiring insulation must not extend by more than 1.0mm from the metal face of the terminal as shown in Figure 2.
- The voltage and current value of the box must not be exceeded. See relevant certificate for current limitations for conditions of use/schedule of limitations.
- Only those terminals shown in the terminal schedule may be incorporated in the box, refer Table 1.
- Inner cable bedding must protrude into the box by a minimum of 20mm past the cable entry point.
- Not more than one single or multiple strand lead shall be connected into either side of the terminals.
- Only earth conductors of equal size shall be connected with rail mounted terminals.
- All terminal screws used and unused shall be tightened.
- A parallel shaft screwdriver of the correct size should be used for rail-mounted terminals screws.
- Where cables enter the box they must be secured by CCG Cable Glands appropriate to the makeup of the cable.
- Unused entry apertures must be blanked with certified CCG Blanking Plugs.
- To maintain IP66/68 a thread seal gasket between the box and cable gland must be installed.
- Before replacing the lid, ensure the lid gasket is in place.
- The use of a CCG Box Spanner (Lid Locking Key) is required to maintain the tamper-proof integrity of the box, refer to Figure 1.

TABLE 1

Box Type	Box Size	Terminal Type	Max Quantity	Rail Size
PosiFit 4 Way	0	4mm² mini terminal	8	15
PosiFit 4 Way	1	2.5mm²	10	35
PosiFit 4 Way	1	4mm² mini terminal	8	15
PosiFit 4 Way/TX	1	4mm²	8	35
PosiFit 4 Way	1	6mm²	6	35
PosiFit 4 Way	1	10mm²	5	35
PosiFit 4 Way	1	16mm²	4	35
PosiFit 4 Way	2	2.5mm²	12	35
PosiFit 4 Way	2	4mm² mini terminal	10	15
PosiFit 4 Way	2	4mm²	10	35
PosiFit 4 Way	2	6mm²	8	35
PosiFit 4 Way	2	10mm²	7	35
PosiFit 4 Way	2	16mm²	6	35
PosiFit 4 Way	2	35mm²	3	35
PosiFit 4 Way	3	2.5mm²	20	35
PosiFit 4 Way	3	4mm² mini terminal	16	15
PosiFit 4 Way	3	4mm²	16	35
PosiFit 4 Way	3	6mm²	12	35
PosiFit 4 Way	3	10mm²	12	35
PosiFit 4 Way	3	16mm²	10	35
PosiFit 4 Way	4	2.5mm²	46	35
PosiFit 4 Way	4	4mm² mini terminal	35	15
PosiFit 4 Way	4	4mm²	35	35
PosiFit 4 Way	4	6mm²	28	35
PosiFit 4 Way	4	10mm²	23	35
PosiFit 4 Way	4	16mm²	18	35
PosiFit 4 Way	4	35mm²	14	35
PosiFit 4 Way	4	70mm²	10	35

Box Type	Box Size	Terminal Type and Size	Max Quantity	Rail Size
Posi Fit Y Box	0	4mm² mini terminal	8	15
Posi Fit Y Box	1	2.5mm²	10	35
Posi Fit Y Box	1	4mm² mini terminal	8	15
Posi Fit Y Box	1	4mm²	8	35
Posi Fit Y Box	1	6mm²	6	35
Posi Fit Y Box	1	10mm²	5	35
Posi Fit Y Box	2	2.5mm²	12	35
Posi Fit Y Box	2	4mm² mini terminal	10	15
Posi Fit Y Box	2	4mm²	10	35
Posi Fit Y Box	2	6mm²	8	35
Posi Fit Y Box	2	10mm²	7	35
Posi Fit Y Box	2	16mm²	6	35
Posi Fit Y Box	3	2.5mm²	20	35
Posi Fit Y Box	3	4mm² mini terminal	16	15
Posi Fit Y Box	3	4mm²	16	35
Posi Fit Y Box	3	6mm²	12	35
Posi Fit Y Box	3	10mm²	12	35
Posi Fit Y Box	3	16mm²	10	35

Box Type	Box Size	Terminal Type and Size	Max Quantity	Rail Size
Posi Fit H Box	1	2.5mm²	10	35
Posi Fit H Box	1	4mm² mini terminal	8	15
Posi Fit H Box	1	4mm²	8	35
Posi Fit H Box	1	6mm²	6	35
Posi Fit H Box	1	10mm²	5	35
Posi Fit H Box	1	16 mm²	4	35
Posi Fit H Box	2	2.5mm²	12	35
Posi Fit H Box	2	4mm² mini terminal	10	15
Posi Fit H Box	2	4mm²	10	35
Posi Fit H Box	2	6mm²	8	35
Posi Fit H Box	2	10mm²	7	35
Posi Fit H Box	2	16mm²	6	35



TS 15 Mini Rail

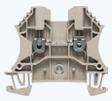

Mini Terminals for conductor sizes 0.5 to 4mm²



TS 35 Top Hat Rail



Terminals for conductor sizes 0.5 to 70mm²

To ensure the box apparatus is tamper proof:
Screw on, tighten and lock lid in place by means of a CCG Box Spanner (Lid Locking Key).

FIGURE 1

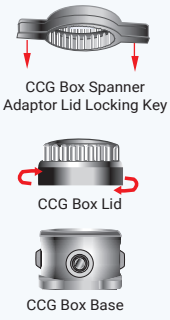

CCG Box Spanner

Product Code	Box Size Reference
4012-0	0
401201	1
401202	2

TABLE 2

VOLTAGE PER TERMINAL CONFIGURATION

Terminals	Volt	Earth Terminals
AKZ 4	275V	AKE 4
WDU 2.5	550V	WPE 2.5
WDU 4	550V	WPE 4
WDU 6	550V	WPE 6
WDU 10	550V	WPE 10
WDU 16	550V	WPE 16
WDU 35	550V	WPE 35
WDU 70 N	550V	WPE 70 N

FIGURE 2

The wiring insulation must not extend by more than 1.0mm from the metal face of the terminal as shown.

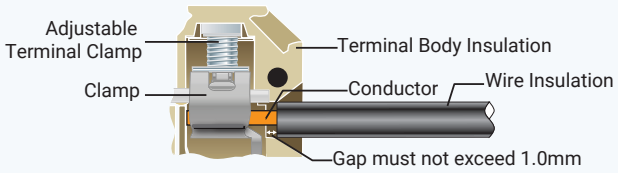

Tel: South Africa +27 11 3942020/1, Australia +1300 CABLE GLANDS (1300 222 534), Hong Kong +852 3427 2090,
Singapore +65 6 8421 002, South Korea +82 51 808 1161, United Kingdom +44 1 642 430346, United Arab Emirates +971 6 552 7781